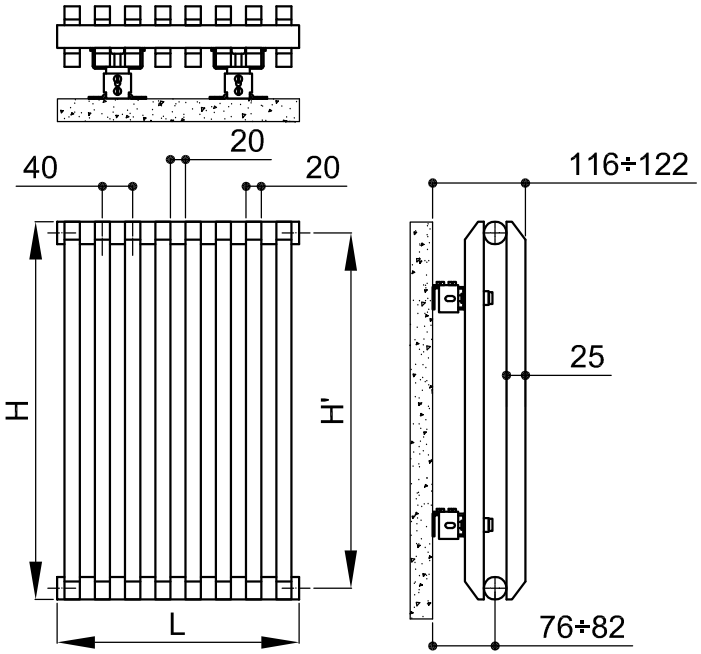
20
40
20
116÷122
H
H'
25
L
76÷82